CRBF 8022 AT

Luoyang JCB Bearing Technology Company Limited has full copyright for this drawing, we reserve the right to investigate and ascertain any misappropriation immorally

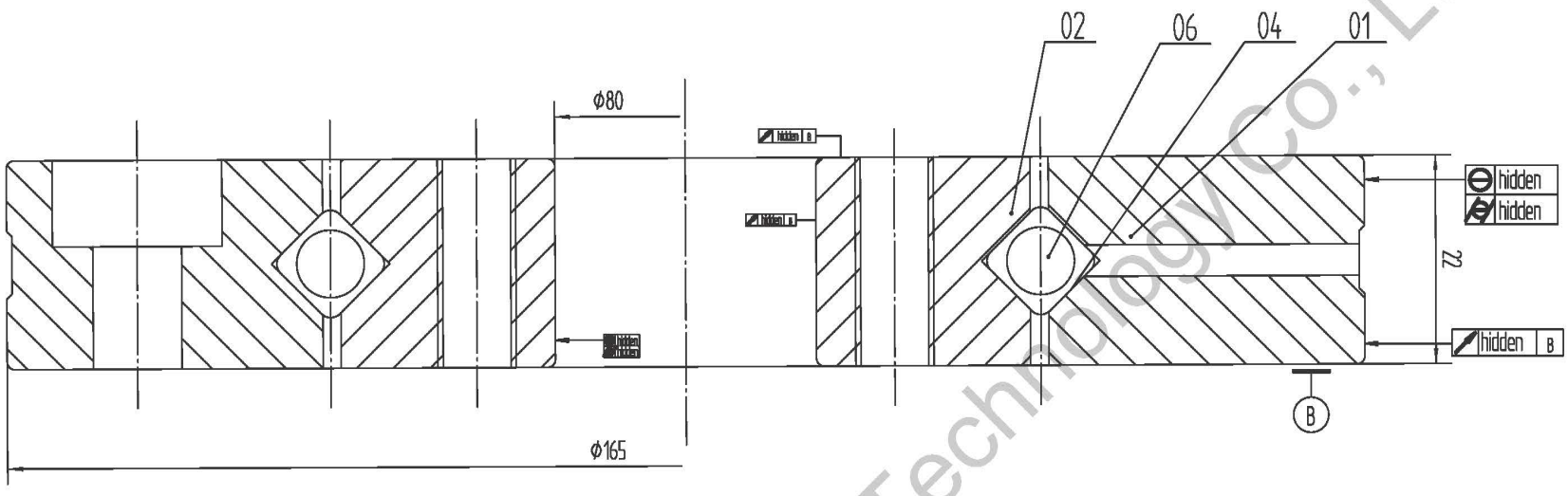


Remark:

1. Luoyang JCB Bearing Technology Co., Ltd is a technical Inc,specialize in designing and manufacturing crossed roller bearing, we can design and manufactur all kinds of crossed roller bearing according to client's equirement, demension range cover from 20mm to 6500mm, precision grade is from P0 to P4.
2. This drawing is only a reference, if you need formal drawing please contact with us sales@jcb-bearing.com, the official drawing will be submitted according to your request.

Contact information
Company Address : No. 285, Fenghua road, Luoyang, Henan, China Postal code : 471000
Phone : 86-379-68611678 Fax : 86-379-68611679
E-mail: sales@jcb-bearing.com Reserved E-mail: jcb-bearing@hotmail.com
Website: www.jcb-bearing.com
www.crossed-roller-bearings.com

roller crossed arrangement

| Part No. | Name | qty | Material | weight (kg) |
|---|---|---|---|---|
| 06 | Spacer | | | |
| 04 | Roller | | steel GCr15-GB/T18254 | |
| 02 | Inner ring | | steel GCr15-GB/T18254 | |
| 01 | outer semi ring | | steel GCr15-GB/T18254 | |

CROSSED ROLLER BEARING

CRBF 8022 AT

Weight (kg) 2.63

Total 4 page First page

Luoyang JCB Bearing Technology Co, Ltd

Luoyang JCB Bearing Technology Co., Ltd